USER MANUAL

FORCE GAUGE

PCE-FM 200 / PCE-FM 50N / PCE-FM 500N

ENGLISH





User manuals in various languages (français, italiano, español, português, nederlands, türk, polski) can be found via our product search on:
www.pce-instruments.com

SAFETY NOTES

Please read this manual carefully and completely before you use the device for the first time. The device may only be used by qualified personnel and repaired by PCE Instruments personnel. Damage or injuries caused by non-observance of the manual are excluded from our liability and not covered by our warranty.

- The device must only be used as described in this instruction manual. If used otherwise, this can cause dangerous situations for the user and damage to the meter.
- The instrument may only be used if the environmental conditions (temperature, relative humidity, ...) are within the ranges stated in the technical specifications. Do not expose the device to extreme temperatures, direct sunlight, extreme humidity or moisture.
- Do not expose the device to shocks or strong vibrations.
- The case should only be opened by qualified PCE Instruments personnel.
- Never use the instrument when your hands are wet.
- You must not make any technical changes to the device.
- The appliance should only be cleaned with a damp cloth. Use only pH-neutral cleaner, no abrasives or solvents.
- The device must only be used with accessories from PCE Instruments or equivalent.
- Before each use, inspect the case for visible damage. If any damage is visible, do not use the device.
- Do not use the instrument in explosive atmospheres.
- The measurement range as stated in the specifications must not be exceeded under any circumstances.
- Non-observance of the safety notes can cause damage to the device and injuries to the user.

We do not assume liability for printing errors or any other mistakes in this manual.
We expressly point to our general guarantee terms which can be found in our general terms of business.
If you have any questions please contact PCE Instruments. The contact details can be found at the end of this manual.

SPECIFICATIONS

Model	PCE-FM 200	PCE-FM 50N	PCE-FM 500N
Measuring range	0 ... 200 N	0 ... 50 N	0 ... 500 N
Calibration	0.1 N		
Load cell	integrated load cell with M6 connection		
Measurement accuracy	±0.5 %		
Units	n, kg, lb		
Display	LCD		
Operating temperature	+10 ... +30 °C / +50 ... +86 °F		
Relative humidity	15 ... 80 % RH, non-condensing		
Weight	1 kg / 2.2 lb		

IMPORTANT INFORMATION BEFORE USE

- Before the impact test, wear mask and gloves; avoiding personal injury in case of object splash.
- Do not use damaged or bent fixture; avoiding personal injury in case of fixture fall or break.
- If “Err-1” appears on the LCD, it indicates that the test load the sensor measures is 110 % larger than the rated load. Decrease the load immediately. Make sure the load applied is smaller than 105 % the rated load after the force gauge is restarted.
- Make sure the force gauge is not overloaded. Overload, excessive impact force and forces other than pull force and push force may damage the sensor.
- Do not use sharp tools to press buttons.
- Keep the force gauge away from water, oil, and other liquids. Put it in a cool, dry, and vibration-free place.
- Use the charger delivered with the force gauge for charging; otherwise, circuit failure or even fire may be caused.
- Follow this document to wire ports; otherwise, circuit failure or even PC fault may be caused.
- Make sure the AC charger is securely inserted into a socket if the product needs to be charged. Looseness may cause short circuit, resulting in electric shock or fire.
- Remove the power adaptor after charging to avoid accidents.
- Do not touch the power adaptor with wet hands; otherwise, electric shock may occur.

» This product is for measuring pull and push forces only. Do not bend or twist the test head. See the following figure for correct operation method.

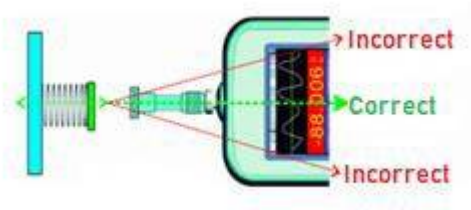

FUNCTION

This force gauge is used to measure tensile and compressive force. It is compact, lightweight, versatile and precise. Therefore, it can be used to test lots of different products. It can be easily used with a test stand.

MAIN FEATURES

Display	LCD / 180 ° rotatable / backlight
Interface	USB
Alarm	Fracture alarm, upper / lower offset, limit alarm
Open Collector Transistor	12 V / 50 mA
Memory	10 measurements
Peak value measurement	yes

DELIVERY CONTENTS

1 x Force gauge PCE-FM 200 or PCE-FM 50N or PCE-FM 500N
1 x Flathead adapter
1 x Hook adapter
1 x Ball head adapter
1 x Chisel head adapter
1 x Notch head adapter
1 x Adapter for extension rod
1 x Extension rod (65 mm / 2.55“)
1 x USB cable
1 x Charging adapter (240 V)
1 x Equipment case
1 x Operation manual

The evaluation software can be downloaded here:
https://www.pce-instruments.com/english/download-win_4.htm

DEVICE DESCRIPTION



Keys and adaptor

1. Measuring adaptor
2. Clamping nut
3. LCD
4. LED
5. Control panel



6. Switched output
7. USB interface
8. Power connection

Dimensions
All dimensions in mm

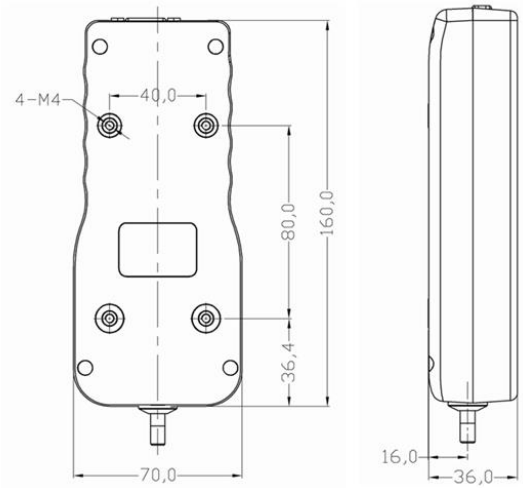

Circuit diagram of 3.5 mm jack
Here you can find the circuit diagram for connecting a 3.5 mm jack in order to establish a connection to the switched outputs.

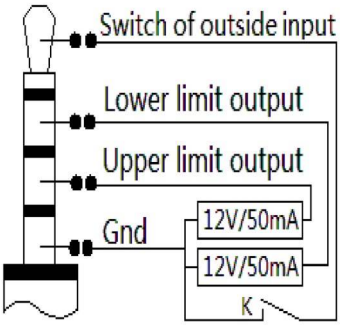

DISPLAY

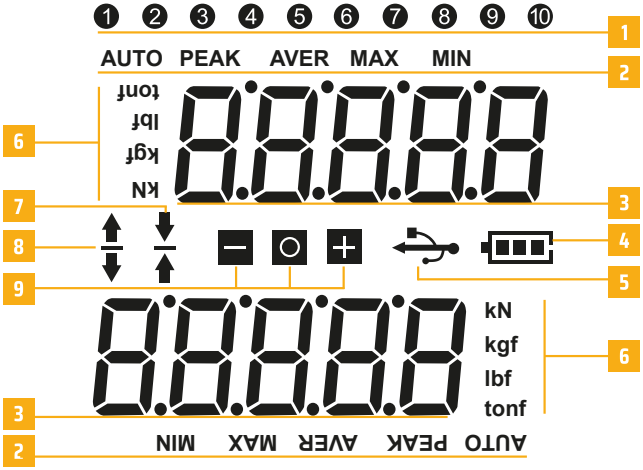

1 Number of values saved (these do not turn when the display does)
2 ATUO: Automatic peak clearing
PEAK: Manual peak clearing
AVER: Average of saved peak values
MAX: highest value measured
MIN: lowest measured value
3 Displays current the peak value or current measurement value in real time, depending on display orientation
4 Battery level indication
5 PC connection
6 Measuring unit
7 Push (compression) icon
8 Pull (tension) icon
9 "—" the displayed value is smaller than the set limit
"o" Measurement successful or interrupted
"+" the displayed value exceeds the set limit

Function keys

Key	Test mode	Online test mode (USB connected)	Storage mode	Menu
	On / off	On / off	x	x
	Zeroing	Zeroing	Memory is cleared	x
	Unit	x	Exit mode	Leave option
	Menu is opened	Invalid	Back to measurement mode	Selected option is opened
	Reading and unit are sent	x	Data are sent	Up
	Saved readings are qeried	x	Switch between AVER, MAX and MIN	Down
	Displayed value is saved	Displayed value is saved	Left	x
	Peak value is deleted	Peak value is deleted	Right	x

OPERATION

Power on and off:
» Press POWER-Key to power on/off.

Open menu and select an option:
» In test mode, press OK to open the settings menu and to select individual options.

Zero and delete a saved value:
» In test mode, press ZEROING-Key to reset the measured value to zero.

» In storage mode, press ZEROING-Key to delete individual memory items. These individual memory items flash and can be selected by means of the arrow keys LEFT and RIGHT and deleted individually.

Change unit and leave a mode:
» In test mode, press UNIT-Key to change the unit.

» In the menu, you can use UNIT-Key to leave a selected option or menu.

» In storage mode, you can use UNIT-Key to leave this mode and return to test mode.

Navigate through the options:
» In the menu, you can use the arrow keys LEFT and RIGHT to navigate through the options.

Save:
» In test mode, you can reset the peak value by using the RIGHT-Key.

» Also in test mode, you can save the peak value by using the LEFT-Key.

» In storage mode, you can navigate to the right through the memory items by using the RIGHT-Key.

» Also in storage mode, you can navigate to the left through the memory items by using the LEFT-Key.

OPTIONS

Option	Name	Options	Meaning	Default setting
F-0	code	code	Analogue code	x
F-1	ast	close/1d/2d/3d	Auto zero from 1/2/3 digits	1 d
F-2	speed	6 ... 200Hz	Measuring frequency	50 Hz
F-3	cal	Two- or three-point	Calibration	x
F-4	old_g	9.7000 ... 9.9000	Gravity value at calibration location	9. 7833
F-5	new_g	9.7000 ... 9.9000	Gravity value at user location	9. 7833
F-6	j-out	inter/outer/cut/ off	**Alarm settings** Inter (within the alarm limit) Outer (outside the alarm limit) Cut (material fracture alarm) Off (alarm deactivated)	Outer: outside alarm limit
F-7	lo		Lower alarm limit	0
F-8	hi		Upper alarm limit	Maximum
F-9	cut	10 ... 90 %	Overload alarm	50 %
F-10	peak	key/ 3 ... 60 sec	Display time of peak value	Remove by pressing key
F-11	bps	4800 ... 57600	Bandwidth	38400 bps
F-12	print	key/stabl/chang/conti	**Key:** data transfer when key is pressed **Stabl:** data transfer when value is stable **Chang:** data transfer when value changes **Conti:** permanent data transfer	Key: data transfer when key is pressed
F-13	angle	0 °/ 180 °	Display orientation	0 °
F-14	off_t	no/ 3 ... 60 min	Auto Power Off	Off: Auto power Off deactivated
F-15	Led	on/off/auto	**Backlight** On (always on) Off (always off) Auto: automatic (5 seconds)	Auto: automatic
F-16	reset	no/yes	Factory settings	No

ALARM

Inter:
This option triggers an audible signal when the measured value is between the lower and the upper alarm limit. „+“ and „-“ will flash in the display.

Outer:
This option triggers an audible signal when:
A: the measured value is below the lower limit („-“ will flash in the display)
B: the measured value is above the upper limit („+“ will flash in the display)

Off:
This option deactivates the alarm.

CALIBRATION BY USING WEIGHTS

You can select either „cal=2“ (2-point calibration) or „cal=3“ (3-point calibration).

Go to the menu F-3 and either select „cal=2“ or „cal=3“ by means of the arrow keys. Confirm your selection with OK. Remove all attachments from the device that affect the measuring cell. Confirm the zero calibration by pressing the OK key. To calibrate the second point, you can use the pre-set weight or select the desired weight by using the arrow keys. Confirm with the OK key. Attach the chosen weight to the device and confirm with OK. The indication in the display will start flashing. When the calibration is finished, the display will “CAL”.

The procedure for the 3-point calibration is the same as for the 2-point calibration, just with one more calibration point.

RECHARGEABLE BATTERY

This product is configured with a 1600 mAh 6 V Ni-Hi rechargeable battery. If it is fully charged, the product can be running uninterruptedly for 10 hours. When shut down, the battery will discharge in 3 months. Make sure the battery level is always sufficient. In case of power shortage, use the delivered DC 12 V/1000 mA power adaptor to charge the product. It will be fully charged within 8 ~ 10 hours. Remove the power adapter immediately after the product prompts full charge. Otherwise, longtime charging may cause the battery to overheat. Only charge the battery when it is completely flat. Frequent charging shortens the battery life.

DISPOSAL

For the disposal of batteries in the EU, the (EU) 2023/1542 directive of the European Parliament applies. Due to the contained pollutants, batteries must not be disposed of as household waste. They must be given to collection points designed for that purpose. In order to comply with the EU directive 2012/19/EU we take our devices back. We either re-use them or give them to a recycling company which disposes of the devices in line with law. For countries outside the EU, batteries and devices should be disposed of in accordance with your local waste regulations. If you have any questions, please contact PCE Instruments.

PCE INSTRUMENTS CONTACT INFORMATION

Germany
PCE Deutschland GmbH
Im Langel 26
D-59872 Meschede
Deutschland
Tel.: +49 (0) 2903 976 99 0
Fax: +49 (0) 2903 976 99 29
info@pce-instruments.com
www.pce-instruments.com/deutsch

France
PCE Instruments France EURL
2, rue Georges Kuhnmunch
67250 Soultz-sous-Forêts
France
Tel.: +33 (0) 972 35 37 17
Fax.: +33 (0) 972 35 37 18
info@pce-france.fr
www.pce-instruments.com/french

Spain
PCE Ibérica S.L.
Calle Mula, 8
02500 Tobarra (Albacete)
España
Tel. : +34 967 543 548
info@pce-iberica.es
www.pce-instruments.com/espanol

United Kingdom
PCE Instruments UK Ltd
Trafford House
Chester Rd, Old Trafford
Manchester M32 0RS
United Kingdom
Tel: +44 (0) 161 464902 0
Fax: +44 (0) 161 464902 9
info@pce-instruments.co.uk
www.pce-instruments.com/english

Italy
PCE Italia s.r.l.
Via Pesciatina 878 / B-Interno 6
55010 Loc. Gragnano
Capannori (Lucca)
Italia
Telefono: +39 0583 975 114
Fax: +39 0583 974 824
info@pce-italia.it
www.pce-instruments.com/italiano

Turkey
PCE Teknik Cihazları Ltd.Şti.
Halkalı Merkez Mah.
Pehlivan Sok. No.6/C
34303 Küçükçekmece - İstanbul
Türkiye
Tel: 0212 471 11 47
Faks: 0212 705 53 93
info@pce-cihazlari.com.tr
www.pce-instruments.com/turkish

The Netherlands
PCE Brookhuis B.V.
Twentepoort West 17
7609 RD Almelo
Nederland
Telefoon: +31 (0)53 737 01 92
info@pcebenelux.nl
www.pce-instruments.com/dutch

United States of America
PCE Americas Inc.
1201 Jupiter Park Drive, Suite 8
Jupiter / Palm Beach
33458 FL
USA
Tel: +1 (561) 320-9162
Fax: +1 (561) 320-9176
info@pce-americas.com
www.pce-instruments.com/us

Denmark
PCE Instruments Denmark ApS
Birk Centerpark 40
7400 Herning
Denmark
Tel.: +45 70 30 53 08
kontakt@pce-instruments.com
www.pce-instruments.com/dansk

Subject to change without notice