USER MANUAL

THERMOMETER

PCE-IRT 10

ENGLISH



User manuals in various languages (français, italiano, español, português, nederlands, türk, polski) can be found via our product search on:
www.pce-instruments.com

1. FEATURES

- 4-wire installation.
- Linear current output .
- Easy installation and connection.
- Temperature range 0ºC...600ºC .
- Emissivity values range from 0.100 to 1.000
- Temperature Unit Seting : ºC / °F.
- Small and robust infrared temperature sensor.

2. SPECIFICATIONS

Spectral range	8 to14 µm.
Distance	D:S = 20:1 (90% energy) measuring distance / spot size
Measurement Temp. range	0ºC...600ºC (0.026 mA/ºC) 32 °F to 1112 °F (0.014 mA/ºF) .
Analog output	Analog output: 4 to 20 mA. linear to temperature.
Loop impedance	Max. 500 Ω@24 V DC.
Emissivity	0.100...1.000
Response time	150ms (95%)
Accuracy	±1% of reading or ±1.5ºC, which is greater
Repeatability	±0.5% of reading or ±1ºC, whichever is greater
Connection cable	1 m length
Power supply	Isolated Power 12VDC to 24VDC@20 mA. Ripple< 2.5%
Operation Temp.	0°C...70°C /32°F...158°F
Operation humidity	Max. 85% RH
Housing	Stainless Steel Tube
Mounting Nut	M22
Dimensions	L= 110 mm x Φ=22 mm
Weight	164 g

Enclosure rating	IP50
Accessories	User manual Mounting bracket

3. FRONT PANEL DESCRIPTION

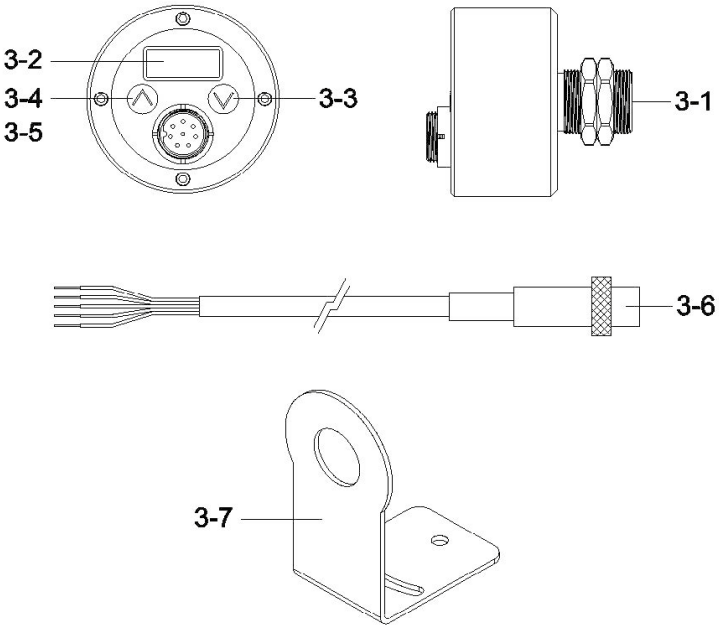

Fig. 1

3-1 IR Sensing Head
3-2 LCD Display
3-3 Down (V) key button
3-4 Up (/\ ) key button
3-5 Cable connector
3-6 Output Cable
3-7 Metal fixed plate(MTL-01)

4. CURRENT LOOP AND TAGET TEMP

The following table shows the relationship for the Current Loop Output with the Target Temperature. The different Current Loop Output is corresponding to the relevant target temperature.

Code	Current Loop Output mA	Target Temp (°C /°F)
1	4.0	0°C / 32°F
2	6.66	100°C / 212°F
3	9.33	200°C / 392°F
4	12.00	300°C / 572°F
5	20.00	600°C / 1112°F

5. MEASURING PROCEDURE OF IR TRANSMITTER

5-1 IR Transmitter Wire connection

The following diagram and table show the proper wiring connections. Each wire is numbered with the number and the relative color. Please follow the function guide when you connect the wire.

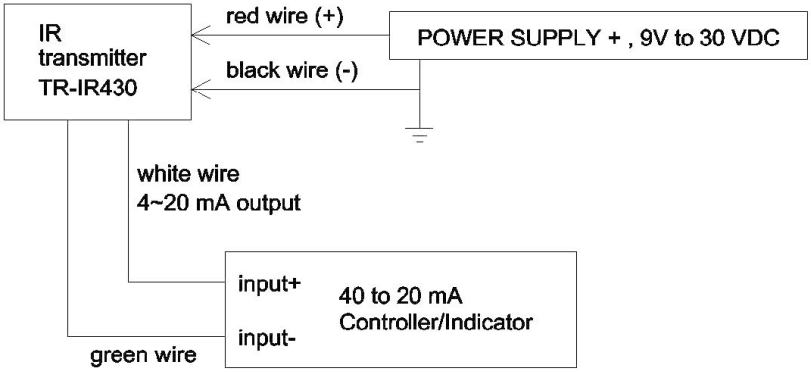

Table 2 : Wire Color & Connection Indication

Wire No.	Wire Color	Label	Function
1	red	CLP	24VDC Power plus(V+)
2	black	CLM	24VDC Power minus(V-)
3	white	OUT	DC Current 4...20mA signal(+)
4	green	OUT	DC Current 4...20mA signal(-)
5	bare		Shield Ground

Warning :
Please pay the special attention to the wire connection for the Red (V+) and Black (V-).
Please take care that white wire can not be linked with any Power line (Red (V+), Black (V-)), and the White wire is current output connecting to controller input.
The controller wire please connection to power line Black.

5-2 IR Temperature measurmente

The IR transmiter sensing head"(Fig1 3-1)" alignment temperature souce to do the temperature measurment ,at the same time the measure value will show in the pannal meter,s.
When the IR transmiter measureing, if need to be fixed, please combined the „(Fig1 3-7)" and „(Fig1 3-1)" as Fig, 2 .

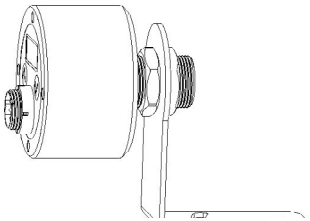

Fig. 2

5-3 IR TEMPERATURE MEASURMENT unit °C or °F

The IR Temprature measurement unit can be select °C or °F. How to select the measurement unit, please ref. p6

6. MEASURING CONSIDERATION

6-1 EMISSIVITY SET

The IR Transmitter sensing energy and calculates the tempreture based on the amount of IR energy it receives . The IR Transmittersenses can be adjustment emissivity value 0.100 ~ 1.000, adjustmet ref. p6
The default emissivity of this instrument is set 0.95 at the factory which will cover 90% of the typical applications.

6-2 Measurement Field distance / Spot (d/s) value

The optical diagrams indicate the target spot diameter at any given distance between the target object and the sensing head. The spot size will change in longer distance corresponding to the following drawing.
In order to prevent measuring errors the object must be as least as big as the spot size.

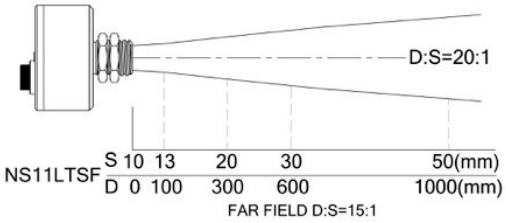

6-3 Disturbance

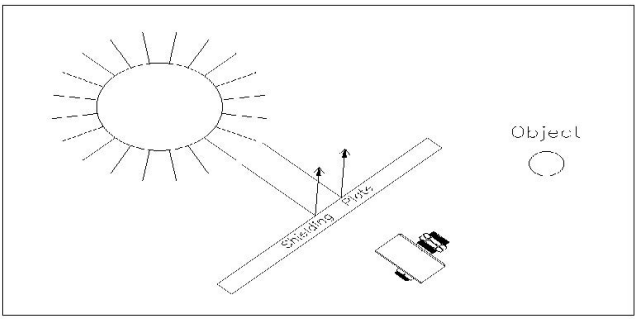

Fig. 2

Under certain measurement case, if the object is adversely effected by powerful infrared energy radiated jorm nearby objects having high emissivity or high temperature. For exarmple, when such objects are measured in aunlight, erratic measurements can result due to powerful
rediated energy from the sun reflecting on the surface of the objectand entering the sensor, then in order to get the exact measuring temperature value, it should install a shielding plate as above Fig. 2.

6-4 Special Surfaces

» If the surface to be measured is coverd by frost or other material , clear it to expose the surface.

» If the surface to be measured is highly reflective, please adjustment emissivity to match your test substance.

6-5 Special Setup

1. Pressing and hold the up (Λ) key then press down (V) keys will enter setup function then release key.
2. Press the up (Λ) key to select the functional parameter.
3. Press the down (V) key, when a (-) symbol appears at the right side of the selected function confirming into Setting Mode.
4. Press the down (V) or up (Λ) key to setup the functional parameter.
5. No action for 7s forces the unit to leave the Setting Mode and save the parameter

Display	Mode	Adjustment Range
E 0.95	Emissivity	0.100...1
P 0.0	Signal output hold (inactive)	0.0...60s
Unit C	Temperature unit	°C /°F

6-6 Peak Hold

The mode allows the sensor to continue outputting the highest temperature for a particular time interval until it is exceeded by next higher peak. The signal output will hold the maximum value for the specified hold time (0.1-600s). Once the hold time is exceeded, it will reset and resume tracking the object temperature until a new peak is reached and the algorithm will start over again.

Remark: The function can be applied to Stability application

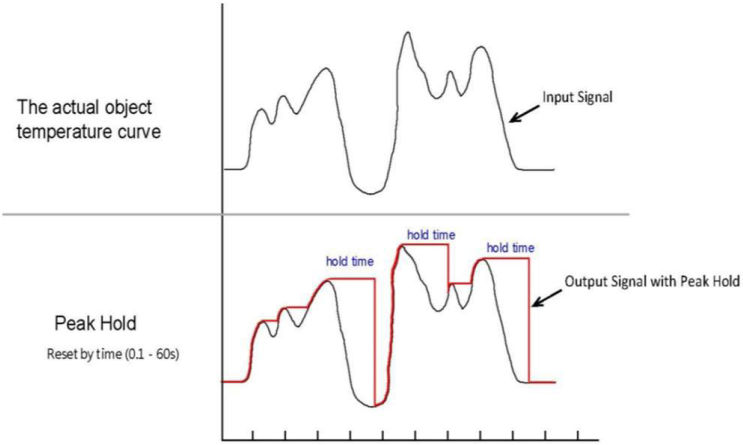

6-7 Factory Default Setting

Durring the measurement pressing and hold „down key (V) „ thenn press the „up key(Λ) „ The display will appear INIT for confirmation then release key.

DISPOSAL

For the disposal of batteries in the EU, the (EU) 2023/1542 directive of the European Parliament applies. Due to the contained pollutants, batteries must not be disposed of as household waste. They must be given to collection points designed for that purpose. In order to comply with the EU directive 2012/19/EU we take our devices back. We either re-use them or give them to a recycling company which disposes of the devices in line with law. For countries outside the EU, batteries and devices should be disposed of in accordance with your local waste regulations. If you have any questions, please contact PCE Instruments.

PCE INSTRUMENTS CONTACT INFORMATION

Germany
PCE Deutschland GmbH
Im Langel 26
D-59872 Meschede
Deutschland
Tel.: +49 (0) 2903 976 99 0
Fax: +49 (0) 2903 976 99 29
info@pce-instruments.com
www.pce-instruments.com/deutsch

United Kingdom
PCE Instruments UK Ltd
Trafford House
Chester Rd, Old Trafford
Manchester M32 ORS
United Kingdom
Tel: +44 (0) 161 464902 0
Fax: +44 (0) 161 464902 9
info@pce-instruments.co.uk
www.pce-instruments.com/english

The Netherlands
PCE Brookhuis B.V.
Twentepoort West 17
7609 RD Almelo
Nederland
Telefoon: +31 (0)53 737 01 92
info@pcebenelux.nl
www.pce-instruments.com/dutch

France
PCE Instruments France EURL
23, rue de Strasbourg
67250 Soultz-Sous-Forets
France
Téléphone: +33 (0) 972 3537 17
Numéro de fax: +33 (0) 972 3537 18
info@pce-france.fr
www.pce-instruments.com/french

Italy
PCE Italia s.r.l.
Via Pesciatina 878 / B-Interno 6
55010 Loc. Gragnano
Capannori (Lucca)
Italia
Telefono: +39 0583 975 114
Fax: +39 0583 974 824
info@pce-italia.it
www.pce-instruments.com/italiano

United States of America
PCE Americas Inc.
1201 Jupiter Park Drive, Suite 8
Jupiter / Palm Beach
33458 FL
USA
Tel: +1 (561) 320-9162
Fax: +1 (561) 320-9176
info@pce-americas.com
www.pce-instruments.com/us

Spain
PCE Ibérica S.L.
Calle Mula, 8
02500 Tobarra (Albacete)
España
Tel. : +34 967 543 548
Fax: +34 967 543 542
info@pce-iberica.es
www.pce-instruments.com/espanol

Turkey
PCE Teknik Cihazları Ltd.Şti.
Halkalı Merkez Mah.
Pehlivan Sok. No.6/C
34303 Küçükçekmece - İstanbul
Türkiye
Tel: 0212 471 11 47
Faks: 0212 705 53 93
info@pce-cihazlari.com.tr
www.pce-instruments.com/turkish

Denmark
PCE Instruments Denmark ApS
Birk Centerpark 40
7400 Herning
Denmark
Tel.: +45 70 30 53 08
kontakt@pce-instruments.com
www.pce-instruments.com/dansk

Subject to change without notice