pH CONTROLLER/MONITOR

PCE-PHC 10



Your purchase of this pH CONTROLLER/MONITOR MONITOR marks a step forward for you into the field of precision measurement. Although this pH controller is a complex and delicate instrument, its durable structure developed. Please read the following instructions carefully and always keep this manual within easy reach.

OPERATION MANUAL

Caution Symbol

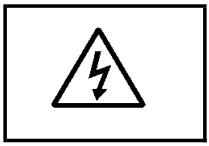

Caution :

* Risk of electric shock !



Caution :

* Do not use fingers or any tool to touch the Wire Terminals.
* Do not apply the relay contact load current > 0.5 Amp.
* The instrument contains no user serviceable parts and should not be opened by the user.
* Repair or after service should be done by a qualified technician only.
* Power supply should apply the correct ACV power voltage
* Cleaning - Only use the dry cloth to clean the plastic case !



* **Equipment protectted throughout by Double Insulation or Reinforced Insulation.**

Environmental Condition

* Comply with EN61010.
  Transient overvoltage at Mains Supply 2500V.
* Pollution Degree 2.
* Altitude up to 2000 meters.
* Indoor use.
* Relative humidity 80% max.

TABLE OF CONTENTS

1. FEATURES..... 1
2. SPECIFICATIONS..... 2
   2-1 General Specifications..... 2
   2-2 Electrical Specifications..... 4
3. FRONT PANEL DESCRIPTION..... 5
   3-1 Display..... 5
   3-2 PV (process value) indicator..... 5
   3-3 SV (set value) indicator..... 5
   3-4 Set Button..... 5
   3-5 ▼ Button..... 5
   3-6 ▲ Button..... 5
   3-7 PH/Temp Button..... 5
   3-8 pH control relay indicator..... 5
   3-9 Temp. control relay indicator..... 5
   3-10 pH indicator..... 5
   3-11 Temp. indicator..... 5
   3-12 Wire terminals 5
   3-13 RS232 terminal..... 5
   3-14 BNC Input socket 5
   3-15 Case holder 5
   3-16 pH Electrode plug (optional)..... 5
   3-17 pH Electrode (optional)..... 5
   3-18 Temp. Probe (optional)..... 5
   3-19 Temp. Wires (optional)..... 5
4. MEASURING PROCEDURE..... 5
   4-1 Terminal connection..... 6
   4-2 pH calibration 6
   4-3 pH measurement (with ATC probe)..... 7
   4-4 pH measurement (without ATC probe)..... 7
   4-5 1st layer setting procedures..... 8
   4-6 2nd layer setting procedures..... 10
5. pH CALIBRATION PROCEDURES..... 14
6. RS232 PC SERIAL INTERFACE..... 17
7. pH ELECTRODE QUALITY CHECK..... 19
8. SYSTEM RESET..... 19

1. FEATURES

* Professional pH and Temp. measurement monitor and controller.
* pH range : 0 to 14 pH x 0.01 pH.
* pH function with high input impedance avoids measuring error.
* Optional Temp. probe (ATC probe, Automatic Temp. Compensation probe) is available for pH measurement compensation and the Temp. measurement.
* Wide manual temperature compensation for pH function, adjustment can be easily operated by push button on the front panel.
* pH calibration is easily to be done by push button on the front panel.
* Build in pH control relay and the Temp. control relay.
* Relay will be make action (On/Off) when the reading value reach high limit or low limit value.
* Temperature Offset value setting.
* Hysteresis value setting for high and low alarm.
* ℃,℉ temp. unit setting with default.
* Large red LED display, high brightness and easy to read.
* RS232 computer interface, send out the pH and the temperature data at the same time.
* Optional pH electrode.
* Optional Temperature probe (ATC probe).
* Optional data acquisition software.
* Microprocessor circuit ensures high accuracy and provides special functions and features.
* Standard 96 X 48 mm DIN case.
* Wide applications: water conditioning, aquariums, beverage, fish hatcheries, food processing, photography, laboratory, paper industry, plating industry, quality control, school & college.

2. SPECIFICATIONS

2-1 General Specifications

Display	4 digits red LED, digit size : 14 mm.	
Circuit	Custom chip of microprocessor LSI circuit.	
Range	pH	0 to 14 pH
	Temp.	-30 to 100 ℃
Display Unit	pH	pH
	Temp.	℃, ℉
pH Input Impedance	10^12 ohm	
Temperature Compensation for pH measurement	Manual	-30 to 100 ℃, be adjusted by push button on front panel.
	Automatic (ATC)	With the optional Temp. probe (TP-07A) 0 to 65 ℃.
pH Calibration	pH7, pH4, and pH10, 3 points calibration ensure the best linearity and accuracy.	
pH Electrode	Optional, Any pH electrode with BNC connector.	
Temp. Probe ATC Probe	Optional, 0 to 65 ℃, TP-07A	
Probe Calibration Period Setting ** PCPS function*	Can set the meter's total operation period to warn the user to make the new calibration for the pH electrode.	
Sampling Time	Approx. 1 second.	
Setting value	1. High limit value setting. 2. Low limit value setting. 3. Hysteresis value setting. 4. Temp. Offset value setting. ** 1, 2, 3 Setting for pH and Temp. function.*	

Relay outputs	Number	2 relays
	Function	*Relay 1 :* pH control relay. *Relay 2 :* Temperature control relay.
	Max load 	0.5 ACA/250 ACV 0.5 DCA/24 DCV * ***Do not apply the relay contact load current > 0.5 A, other wise the relay may be damaged permanently without warranty.***
External Power Supply	DC 12 V, 50 mA max.	
Data Output	RS 232 PC serial interface.	
Operating Temperature	0 to 50 ℃. * *Meter*	
Operating Humidity	Less than 80% R.H. * *Meter*	
Power Supply	90 to 260 ACV, 50/60 Hz.	
Power Consumption	Approx. 4.7 VA/AC 110V. Approx. 5.3 VA/AC 220V.	
Weight	275 g/ 0.60 LB. * *Meter only.*	
Dimension	DIN size : 96 x 48 mm. Depth : 107 mm.	
Accessories Included	pH conroller PCE-PHC 10..... 1 PC Instruction manual..... 1 PC	

2-2 Electrical Specifications (23 ±5 ℃)

pH (meter only)

Range	***Resolution***	***Accuracy***
0 to 14 pH	0.01 pH	±(0.02 pH + 2 d)

Temperature   ***(used optional Temp. probe, TP-07 A)***

Measurement	***Range***	***Resolution***	***Accuracy***
℃	0 ℃ to 65 ℃	0.1 ℃	±0.8 ℃.
℉	32℉ to 149 ℉	0.1 ℉	±1.5 ℉.

* ***Accuracy is based on reading value.***

* *Specification tests under the environment RF Field Strength less than 3 V/M and frequency less than 30 MHz only.*

3. FRONT PANEL DESCRIPTION

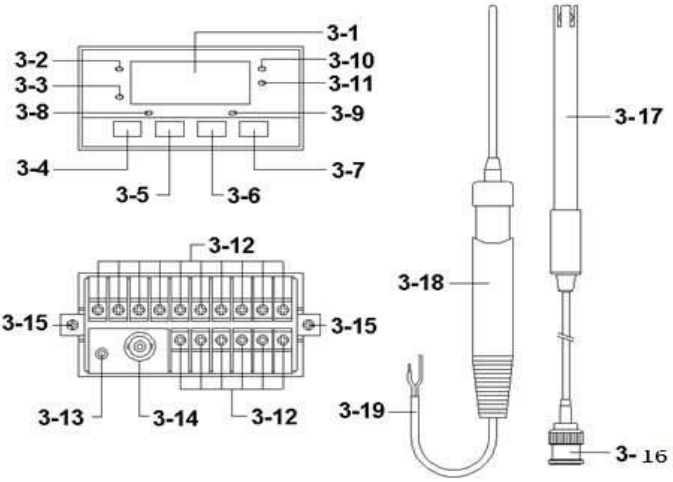

Fig. 1

3-1 Display
3-2 PV (process value) indicator
3-3 SV (set value) indicator
3-4 Set Button
3-5 ▼ Button
3-6 ▲ Button
3-7 PH/Temp Button
3-8 pH control relay indicator
3-9 Temp. control relay indicator
3-10 pH indicator
3-11 Temp. indicator
3-12 Wire terminals
3-13 RS232 terminal
3-14 BNC Input socket
3-15 Case holder
3-16 pH Electrode plug (optional)
3-17 pH Electrode (optional)
3-18 Temp. Probe (optional)
3-19 Temp. Wires (optional)

4. MEASURING PROCEDURE

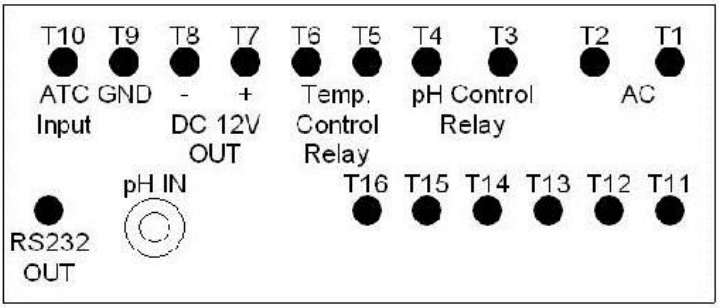

Terminal layout Fig. 2

4-1 Terminal connection

1) Input the ACV power (90 to 260 ACV) to T1, T2.



Do not input the over voltage to the AC input terminals.

2) Connect the " pH Control Relay " output from T3, T4.
   Connect the " Temp. Control Relay " output from T5, T6.

4-2 pH calibration

When the first time use the pH electrode or the pH electrode already be used a long period, then before the measurement, it should make the calibration first, the calibration procedures, refer to page

Chapter 5. pH CALIBRATION PROCEDURES

4-3 pH measurement (with ATC probe)

1) Prepare the optional Temp. probe (ATC probe TP-07A) connect the Temp. Wires (3-19, Fig. 1) to the " Wire terminals " (3-12) T10, T9 (bare wire).
   Prepare the optional pH electrode (For example PE-21, PE-03...), Connect the " pH Electrode plug " (3-16, Fig. 1) to " BNC Input socket " (3-14, Fig. 1).
2) Power on the meter, immerse the above pH electrode and the Temp. probe into the measuring solution. The " Display " (3-1, Fig. 1) will show the pH value, in the same time the " pH indicator " (3-10, Fig. 1) will light.
3) Press the " PH/Temp Button " (3-7, Fig. 1) once, the " Temp. indicator " (3-11, Fig. 1) will light, the " Display " (3-1, Fig. 1) will show the Temp. value that sensing from the Temp. probe (ATC probe TP-07A).

   * *Press the " PH/Temp Button " (3-7, Fig. 1) once again, the " Display " will return the " pH value ", in the same time the " pH indicator " (3-10, Fig. 1) will light again.*
   * *The pH measurement value will be compensated automatically by the Temp. value that sensing from the Temp. probe (ATC probe, TP-07A).*
   * *During the Temp. measurement, if intend to change the default Temp. unit from the ℃ to ℉, refer to page 10.*

4-4 pH measurement (without ATC probe)

1) Prepare the optional pH electrode (For example PE-21, PE-03...), Connect the " pH Electrode plug " (3-16, Fig. 1) to " BNC Input socket " (3-14, Fig. 1).

   Not connect the Temp. probe (ATC probe , TP-07A) to the " Wire terminals " (3-12) T10, T9.

2) Power on the meter, Immerse the above pH electrode into the measuring solution.
   The " Display " (3-1, Fig. 1) will show the pH value, in the same time the " pH indicator " (3-10, Fig. 1) will light.
3) Press the " PH/Temp Button " (3-7, Fig. 1) once, the " Temp. indicator " (3-11, Fig. 1) will light, the " Display " (3-1, Fig. 1) will show the Manual Temp. value.

   * *Press the " PH/Temp Button " (3-7, Fig. 1) once again, the " Display " will return the " pH value ", in the same time the " pH indicator " (3-10, Fig. 1) will light again.*
   * *The pH measurement value will be compensated by the Manual Temp. value.*
   * *The default " Manual Temp. value " is 25 ℃.*
   * ***The procedures to set the Manual Temp. value, refer to page 11.***
   * *The method to change the default Manual Temp. unit from the ℃ to ℉, refer to page 10.*

4-5 1st layer setting procedures

LoLt	**Low Limit**
HILt	**High Limit**

Low Limit Value Setting

1) Press the " Set Button " (3-4, Fig. 1) once, the " Display " will show " LoLt ", now the meter is ready for the pH " Low Limit " value setting.

   Press the " PH/Temp Button " (3-7, Fig. 1) once, the " Temp indicator " (3-11, Fig. 1) will light, now the meter is ready for the Temperature " Low Limit " value setting.

Remark :

- ***Under " Display " show " LoLt ", if " pH indicator " (3-10, Fig. 1) is lit, meter is ready for " pH Low Limit " setting.***
- ***Under " Display " show " LoLt ", if " Temp. indicator " (3-11, Fig. 1) is lit, meter is ready for " Temperature Low Limit " value setting.***
- ***The function of " Low Limit value " setting, refer to page 12, Fig. 2.***

2) Use the " ▼ Button " (3-5, Fig. 1) and the " ▲ Button " (3-6, Fig. 1) to adjust the desiring " Low Limit " value.
   - *When adjust the value, the " SV indicator " (3-3, Fig. 1) will light.*

High Limit Value Setting

1) After set the " Low Limit " value, press the " Set Button " (3-4, Fig. 1) twice, the " Display " will show " HILt ", now the meter is ready for the pH " High Limit " value setting.

   Press the " PH/Temp Button " (3-7, Fig. 1) once, the " Temp indicator " (3-11, Fig. 1) will light, now the meter is ready for the Temperature " High Limit " value setting.

Remark :

- ***Under " Display " show " HILt ", if " pH indicator " (3-10, Fig. 1) is lit , meter is ready for " pH High Limit value " setting.***
- ***Under " Display " show " HILt ", if " Temp. indicator " (3-11, Fig. 1) is lit, it meter is ready for " Temperature High Limit value " setting.***
- ***The function of " High Limit value " setting, refer to page 12, Fig. 2.***

2) Use the " ▼ Button " (3-5, Fig. 1) and the " ▲ Button " (3-6, Fig. 1) to adjust the desiring " High Limit " value.
   * *When adjust the value, the " SV indicator " (3-3, Fig. 1) will light.*

   After adjust the " High Limit " value, press the " Set Button " (3-4, Fig. 1) twice, " Display " will return to the normal measuring screen.

4-6 2nd layer setting procedures

tPty	**Temp. unit setting**
tPSt	**Temp. compensation value setting**
HySt	**Hysteresis setting**
tPoA	**Temp. Offset setting**
PCPS	**Probe Calibration Period Setting**

Temperature unit setting

1) Press the " Set Button " (3-4, Fig. 1) continuously at least two seconds, the " Display " will show " tPty ", now the meter is ready for the Temperature unit (℃, ℉) setting.
2) Use the " ▼ Button " (3-5, Fig. 1) and the " ▲ Button " (3-6, Fig. 1) to adjust the desiring temperature unit to " C " or " F ".
   * *When adjust the Temp. unit, the " SV indicator " (3-3, Fig. 1) will light.*

Temp. compensation value setting

The pH measurement value is effected by the measurement environment Temp. value. If intend to make the precision pH measurement, it should connect the Temp. probe (ATC probe, TP-07A) to " Wire terminals " T9, T10. Otherwise, it should adjust the Temp. compensation values to reach the Temp. values of the measured solution, the procedures are :

1) After select the temperature unit (℃,℉), press the " Set Button " (3-4, Fig. 1) twice, the " Display " will show tPSt ", now the meter is ready for the the Temp. compensation value setting.
2) Use the " ▼ Button " (3-5, Fig. 1) and the " ▲ Button " (3-6, Fig. 1) to adjust the desiring Temp. compensation value.
   * *If the meter already connect the Temp. probe (ATC probe, TP-07A), though already adjust the Temp. compensation value, the pH measurement value will be not effected by the setting Temp. compensation value, it compensated by the Temp. probe only.*
   * *When adjust the Temp. compensation value, the " SV indicator " (3-3, Fig. 1) will light.*

Hysteresis value setting

1) After select the temperature compensation value, press the " Set Button " (3-4, Fig. 1) twice, the " Display " will show HySt ", now the meter is ready for the Hysteresis value setting.
2) Use the " ▼ Button " (3-5, Fig. 1) and the " ▲ Button " (3-6, Fig. 1) to adjust the desiring Hysteresis setting value.
   * *When adjust the Hysteresis value, the " SV indicator " (3-3, Fig. 1) " will light.*

Press the " PH/Temp Button " (3-7, Fig. 1) once, the " Temp indicator " (3-11, Fig. 1) will light, now the meter is ready for the Temperature " Hysteresis " value setting.

Remark :

* ***Under " Display " show " HySt ", if " pH indicator " (3-10, Fig. 1) is lit, meter is ready for " pH Hysteresis value " setting.***
* ***Under " Display " show " HySt ", if " Temp. indicator " (3-11, Fig. 1) is lit, meter is ready for " Hysteresis value " setting.***
* ***The function of " Hysteresis value " setting, refer to page 12, Fig. 2.***

Fig. 2

For example :

High limit value : 100
Low limit value : 20
Hysteresis value : 5

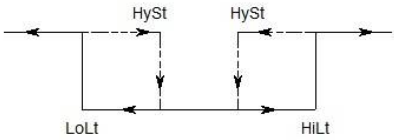

a. The control relay will On when measuring value up to 100. The control relay will Off again when measuring value down to 95.
b. The control relay will On when measuring value down to 20. The control relay will Off when measuring value up to 25.

Temp. offset value setting

1) After finish the Hysteresis setting, press the " Set Button " (3-4, Fig. 1) twice, the " Display " will show " tPoA ", now the meter is ready for the the Temp. offset value setting.
2) Use the " ▼ Button " (3-5, Fig. 1) and the " ▲ Button " (3-6, Fig. 1) to adjust the desiring Temp. offset value.

* *When adjust the Offset value, the " SV indicator " (3-3, Fig. 1) and Temp. indicator (3-11, Fig. 1) will light.*

Remark :

* ***For example of " Temp. Offset value setting " :***
  The Temp. reading value is 18.2
  The offset value is 1.1
  The new display value will be 19.3 (18.2 + 1.1).

Probe Calibration Period Setting (PCPS)

Typically the pH electrode should be calibrated after it is used for a certain period.
" Probe Calibration Period Setting function " can set a period time (unit is hour, default value is 720 hours), then after the pH electrode usage hours reach to setting PCPS hours, the display reading will present warning message to inform the user should to execute the new calibration procedures.

1) After finish the Temp. offset value setting, press the " Set Button " (3-4, Fig. 1) twice, the " Display " will show " PCPS ", now the meter is ready for the the PCPS value setting.
2) Use the " ▼ Button " (3-5, Fig. 1) and the " ▲ Button " (3-6, Fig. 1) to adjust the desiring " Probe Calibration Period Setting value (PCPS value) ".

* *When adjust the PCPS value, the " SV indicator " (3-3, Fig. 1) and pH indicator (3-10, Fig. 1) will light.*
* *When the meter's usage hours reach to the PCPS value, the Display will show text " CAL " and the measurement value in alternation.*
* ***It can reset the usage hours to zero by pressing the " Set Button " (3-4, Fig. 1) and the " ▼ Button " (3-5, Fig. 1) at the same time.***

Note : During the Display show above " CAL " text, before to reset the usage hours, the user can not execute the normal function setting.

3) After finish the PCPS value setting, press the " Set Button " (3-4, Fig. 1) again, the " Display " will return to normal measurement screen and finish the " 2nd layer setting procedures ".

5. pH CALIBRATION PROCEDURES

5-1 Preparation and consideration of pH calibration

1) Prepare the
   a. " pH 7 buffer solution " (optional, such as PCE-PH7)
   b. " pH 4 buffer solution " (optional, such as PCE-PH4)
2) The complete calibration procedures should be executed by both buffer solution :
   a. " pH 7 buffer solution "
   b. " pH 4 buffer solution "
3) **It should be calibrated under the " pH 7 buffer solution " at first, then calibrated under the " pH 4 buffer solution " following.**

5-1 pH calibration (without ATC probe)

1) Power on the meter, immerse the pH electrode into the standard " Buffer solution ". The " Display " (3-1, Fig. 1) will show the pH value of the buffer solution.
2) Use the two fingers to press " Set Button " (3-4, Fig. 1) and " ▲ Button " (3-6, Fig. 1) continuously at the same time until the " Display " show the text " CAL "

Solution Temp. adjustment

Follow the text " CAL " , the display will show the existing manual Temp. value with flashing, at the same time " SV indicator " (3-3, Fig. 1) and the " Temp. indicator " (3-11) will light.

Use the " ▼ Button " (3-5, Fig. 1) and the " ▲ Button " (3-6, Fig. 1) to adjust the Display until its value reach to the Temp. value of " Buffer solution ", then press " Set Button " (3-4, Fig. 1) will entry the manual Temp. value.

pH Calibration

After enter the above manual Temp. value, the Display will show the pH value 7.00 or 4.00 with flashing,

* *Use the pH 7 buffer solution, it will show 7.00*
* *Use the pH 4 buffer solution, it will show 4.00*

at the same time " SV indicator " (3-3, Fig. 1) and the " pH indicator " (3-10) will light.

* If the aim calibration value is pH 7.00 (4.00) exactly, then wait about 5 seconds the meter will entry the calibration value and finish the pH calibration procedures , the Display will return to normal screen, the " PV indicator " (3-2, Fig. 1) will on, the " SV indicator " (3-3, Fig. 1) will off.
* If the aim calibration value is not pH 7.00 (4.00) exactly, during the Display flashing, use the " ▼ Button " (3-5, Fig. 1) and the " ▲ Button " (3-6, Fig. 1) to adjust Display until it reach to the pH value of " Buffer solution ", then press " Set Button " (3-4, Fig. 1) to entry calibration data. The Display will return to normal screen, the " PV indicator " (3-2, Fig. 1) will On, the " SV indicator " (3-3, Fig. 1) will off.

During the calibration, if the Display show " Err ", means pH electrode's output value already beyond ± 1.2 pH and the electrode can not be used any more, it should change the new electrode.

When change the new pH electrode, it recommend that to execute the " SYSTEM RESET " at first, refer to page 19.

5-2 pH calibration (with ATC probe)

1) Power on the meter, immerse the above pH electrode and the Temp. probe into the measuring solution. The " Display " (3-1, Fig. 1) will show the pH value of the Buffer solution.
2) Use the two fingers to press " Set Button " (3-4, Fig. 1) and " ▲ Button " (3-6, Fig. 1) continuously at the same time until the " Display " show the text " CAL ", then present the Temp. value with flashing that sensing from the Temp. probe (ATC probe), after few seconds (about 5 seconds) the Display will change to the pH value 7.00 or 4.00 with flashing,
   * *Use the pH 7 buffer solution, it will show 7.00*
   * *Use the pH 4 buffer solution, it will show 4.00*

   at the same time " SV indicator " (3-3, Fig. 1) and the " pH indicator " (3-10) will light.

   * If the aim calibration value is pH 7.00 (4.00) exactly, then wait about 5 seconds the meter will entry the calibration value and finish the pH calibration procedures , the Display will return to normal screen, the " PV indicator " (3-2, Fig. 1) will on, the " SV indicator " (3-3, Fig. 1) will off.
   * If the aim calibration value is not pH 7.00 (4.00) exactly, during the Display flashing, use the " ▼ Button " (3-5, Fig. 1) and the " ▲ Button " (3-6, Fig. 1) to adjust Display until it reach to the pH value of " Buffer solution ", then press " Set Button " (3-4, Fig. 1) to entry calibration data. The Display will return to normal screen, the " PV indicator " (3-2, Fig. 1) will On, the " SV indicator " (3-3, Fig. 1) will off.

6. RS232 PC SERIAL INTERFACE

The instrument has RS232 PC serial interface via a 3.5 mm terminal (3-13, Fig. 1).

The data output is a 16 digit stream which can be utilized for user's specific application.

A RS232 lead with the following connection will be required to link the instrument with the PC serial port.

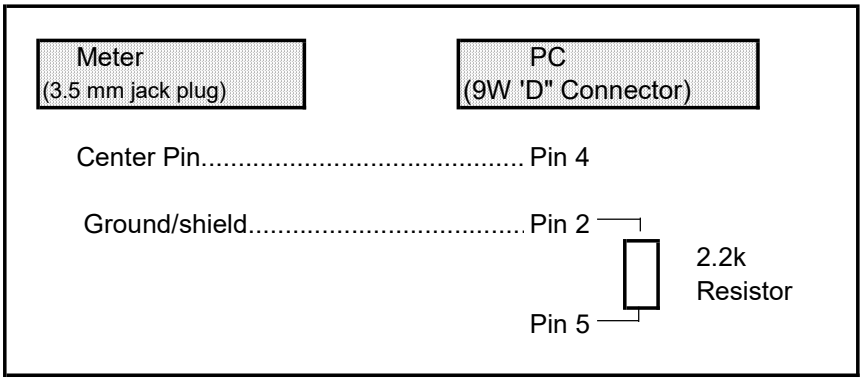

The 16 digits data stream will be displayed in the following format :

D15	D14	D13	D12	D11	D10	D9	D8	D7	D6	D5	D4	D3	D2	D1	D0

Each digit indicates the following status :

D15	Start Word		
D14	4		
D13	When send the upper display data = 1 When send the lower display data = 2		
D12 & D11	Annunciator for Display		
	℃ = 01	℉ = 02	pH = 05
D10	Polarity 0 = Positive 1 = Negative		
D9	Decimal Point(DP), position from right to the left 0 = No DP, 1= 1 DP, 2 = 2 DP, 3 = 3 DP		
D8 to D1	Display reading, D8 = MSD, D1 = LSD. For example : If the display reading is 1234, then D8 to D1 is : 00001234		
D0	End Word		

RS232 setting

Baud rate	9600
Parity	No parity
Data bit no.	8 Data bits
Stop bit	1 Stop bit

7. pH ELECTRODE QUALITY CHECK

If the pH electrode output value already beyond ±1.2 pH, the electrode's quality is bad, it can not be used any more and should change the new electrode.

Install the pH electrode, power on the meter, use the two fingers to press both " ▼ Button " (3-5, Fig. 1) and " ▲ Button " (3-6, Fig. 1) Button continuously more than 2 seconds until the Display show the text " CHK " and flashing 6 times, then if Display show " oK " , means the quality of the electrode is oK.
if Display show " Err ", means the electrode is already out of life and need to change the new electrode.

8. SYSTEM RESET

Power on the meter, use the two fingers to press " Set Button " (3-4, Fig. 1) and " PH/Temp. Button " (3-7, Fig. 1) continuously more than 5 seconds until the Display show the text " rSt ", release the buttons. After " rSt " text flashing 2 times will return to the normal screen. The meter system will be reset, all the calibration data will be cleared, the meter's internal function will return the default value.